combiarialdo
accessories & hardware for metal fittings

art. 230

Tavellino per sportelli

1

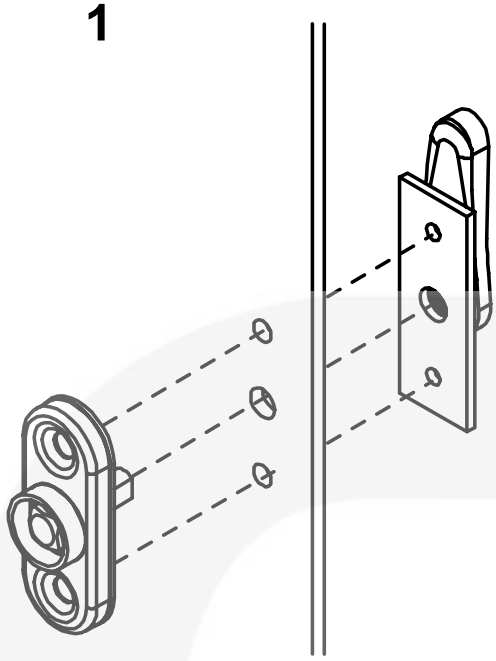

2

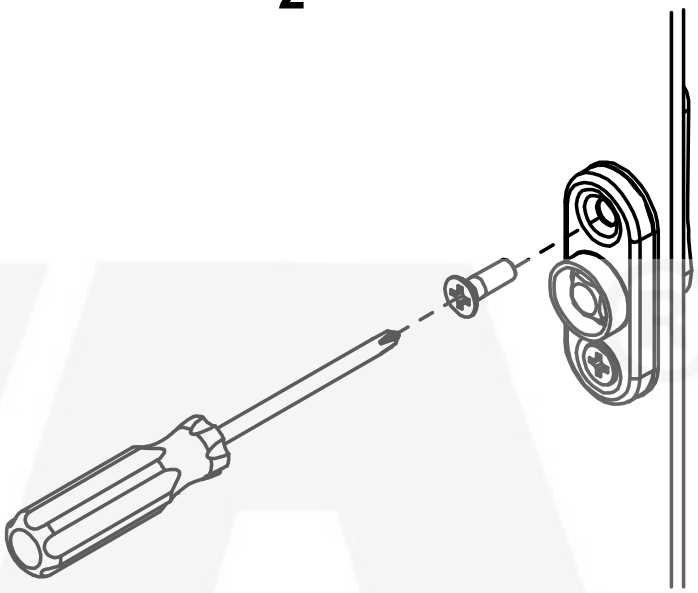

3

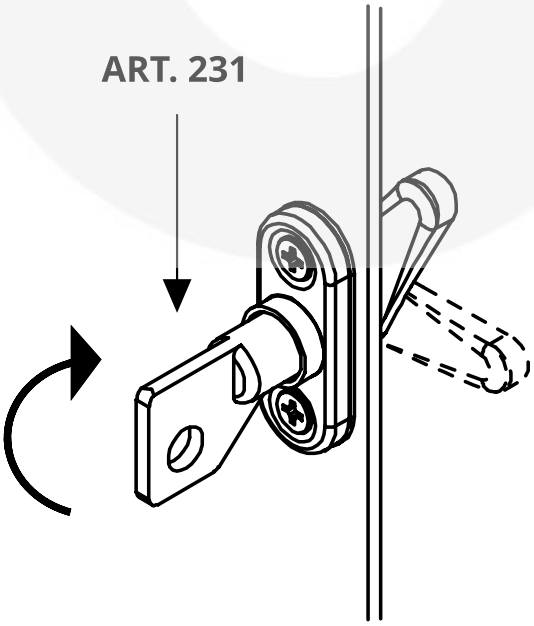
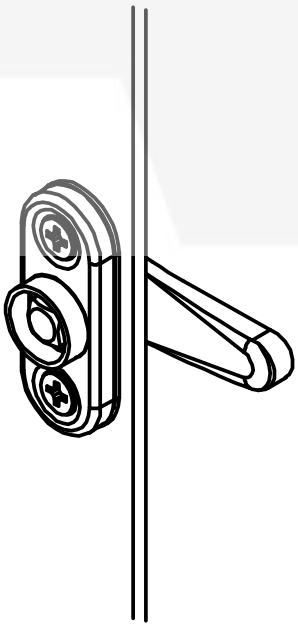
4