combiarialdo
accessories & hardware for metal fittings

art. 289

Catenaccio verticale con asta tonda

1

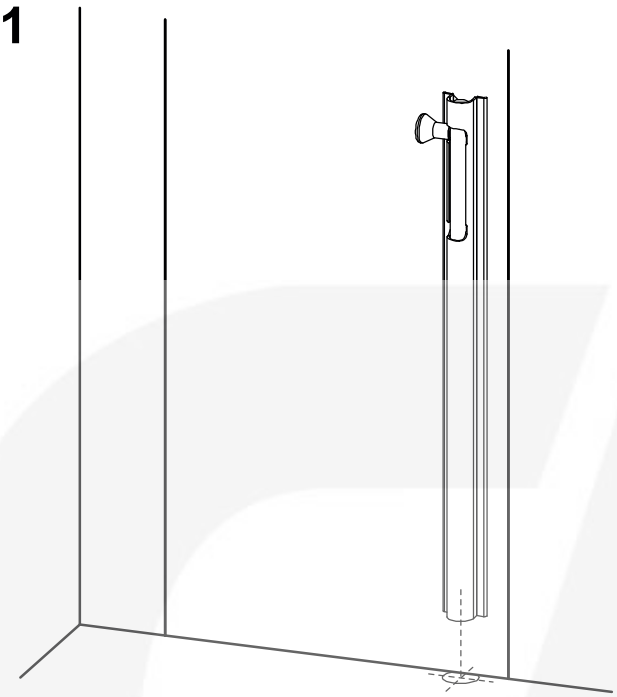

2

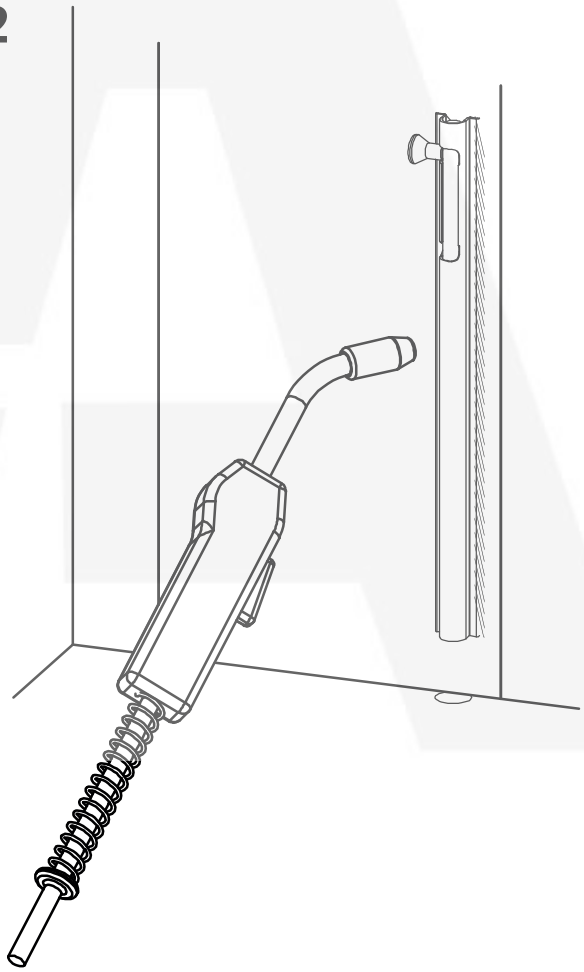
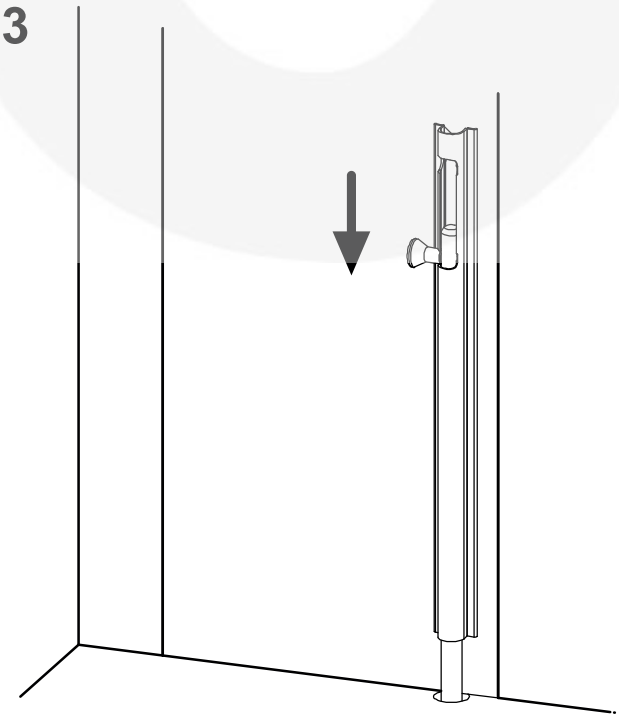
3