combiarialdo
accessories & hardware for metal fittings

art. 297

Catenaccio verticale

1

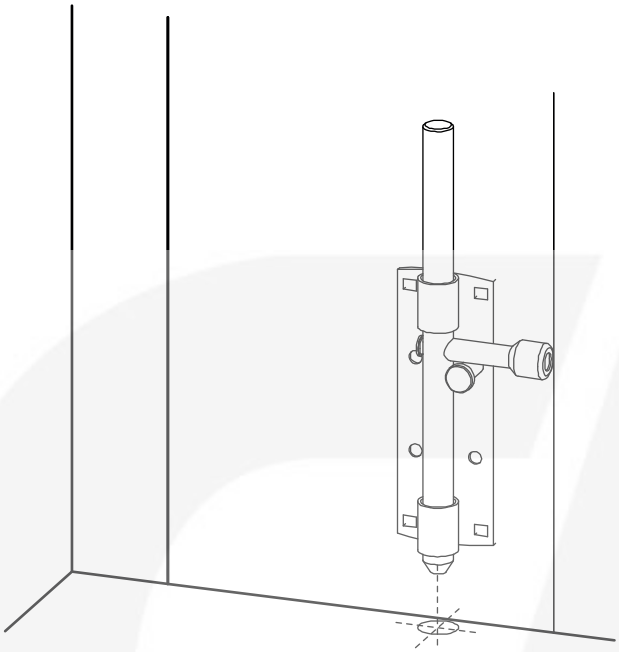

2

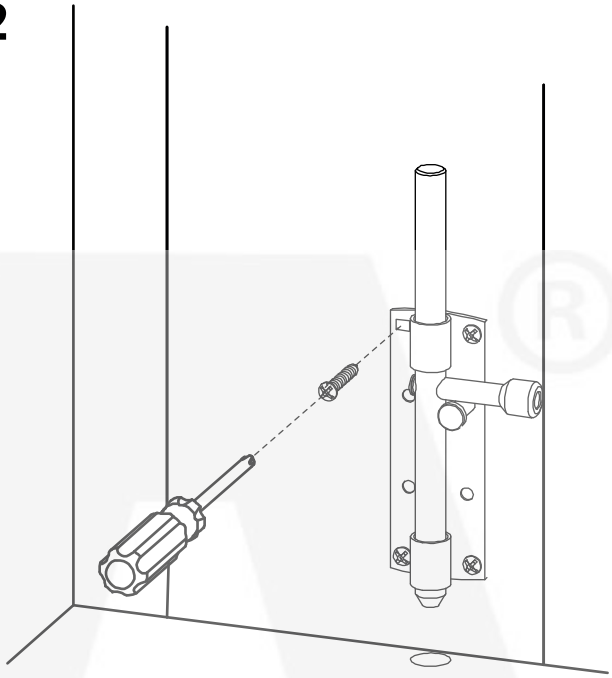

3

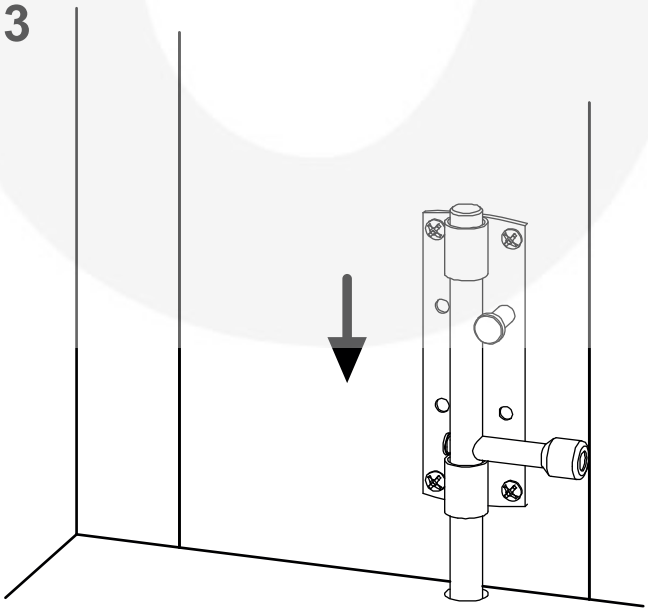

ART. 297

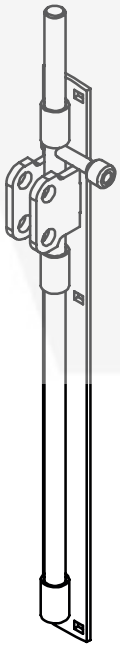

ART. 298